Simply Better Connections

KE6920ATC

KE6920 Air Traffic Control Bundle Solution

ATEN KE6920 Air Traffic Control Bundle Solution consists of two high performance IP-based transmitters (KE6920T) that connect to two PCs / servers and an IP-based receiver (KE6920R), providing console access from a separate location. The solution builds effortless IP extension that eliminates the distance restrictions of control room management, enabling a faster response to mission-critical data center emergencies. With Primary-Secondary Architecture, the KE6920 Air Traffic Control Bundle Solution enables connection to a primary and a secondary computer that allows instant system failover via hotkey switching without moving around workstations. The deployment of ATEN KE6920 Air Traffic Control Bundle Solution allows access to a computer system from a remote USB console (USB keyboard / mouse and DVI monitor) over the intranet, allowing the computer to be located in a secure and temperature controlled environment, which is also isolated from the user workstation.

KE6920T / KE6920R features one DVI display at each end, providing video resolutions up to 2560 x 2048 @ 50Hz / 2560 x 1600 @ 60Hz as well as flawless and lossless video compression quality with extremely low latency. KE6920T and KE6920R both support connections via the RJ-45 port or the two SFP slots. The transmitter KE6920T and receiver KE6920R working as an IP-based extender can be connected either directly to each other or via a high-speed network, over a copper-based or fiber-based LAN, ensuring 24/7 availability of remote access to servers. To connect via the SFP slots, the extender supports 1 Gbps SFP fiber module* expansions, enabling connections via fiber optic network to extend transmission distances up to 10 km.

Other key highlights of the KE6920 Air Traffic Control Bundle Solution include that the solution features the dedicated LAN port for KE direct connections which can be isolated from the corporate network; it also provides secure data transmission – AES 128-bit encryption to secure all data before transmitted over a network and decrypts the data on the receiver. The solution adopts industry standard Transport Layer Security (TLS) protocol. Moreover, the KE6920 Air Traffic Control Bundle Solution features dual power supplies for redundancy, eliminating the need for a power adapter and effectively reducing the power configuration cost. The LAN and power redundancy supports dual power and network connections for system failover, ensuring robust system uptime.

In particular, ATEN KE6920 Air Traffic Control Bundle Solution supports the exceptional 2K x 2K screen resolutions dedicated for radar monitoring in Approach Control Room and Area Control Center specifically in air traffic control scenarios. It allows customizable hotkey settings for instant network port switching without going via CCKM – KVM over IP Matrix Manager, within the network of 2x Tx and 1x Rx deployment. These make the KE6920 Air Traffic Control Bundle Solution perfect for the ATC industry.

Note:
The SFP module (2A-136G / 2A-137G) is sold separately. Contact your ATEN dealer for product information.
For the latest list of compatible network switches, please visit: ATEN Support Center for more information.

Features

- Exclusive Features for ATC Industry
  - Supports 2K x 2K video resolution (2048 x 2048 @ 60Hz)
  - Disconnection Alert – pop-up warning message and looping alarm beeping notify users the disconnection status
  - Supports power / network failover – 2 DC jacks for power redundancy and 1 RJ-45 & 2 SFP fiber ports for network failover to ensure constant availability for mission-critical applications

- Advanced Features
  - Connection Redundancy – automatically connects to two additional transmitter (Tx) after disconnection with the original Tx, ensuring constant access to servers (via KE OSD)
  - Rx access control – users at the Tx local console can enable / disable Rx access by simply pressing a control button*
    *The KVM over IP Access Control Box (2XRT-0015G) is sold separately. Contact your ATEN dealer for product information.

- Hardware
  - Supports DVI-D Dual Link video resolutions up to 2560 x 1600 @60Hz and 2560 x 2048 @50Hz
  - Supports stereo speakers and stereo microphone
  - High speed USB Storage Transmission support
  - Auto-MDIX – automatically detects cable type
  - Built-in 8KV / 15KV ESD protection and 2KV surge protection
  - Fanless design for silent operations that are energy efficient
  - Supports connection via Gigabit Ethernet port (RJ-45) or 1Gbps SFP fiber module expansions* for failover
  - Supports 1Gbps SFP fiber module* expansions up to 10 km
  - Power Redundancy –2 DC jacks for power redundancyv
  - Rack Mountable – Mounting options:
    – 2X-021G Dual Rack Mount Kit
    – 2X-031G Single Rack Mount Kit
  - Includes an industrial-grade power adapter – supports operating temperature of 0°C- 50°C to ensure durability and adaptability under harsh environmental conditions

    *The SFP module (2A-136G / 2A-137G) is sold separately. Contact your ATEN dealer for product information.

- Management
  - Dual console operation – controls your system from both the transmitter's and receiver's keyboard, monitor, and mouse consoles
  - Local console for emergency operation
  - OSD (On Screen Display) on the receiver configures both Tx / Rx devices
  - EDID Expert™ – selects optimum EDID settings to prevent video compatibility issue caused by different monitors
  - Video Compression Level – allows you to increase/decrease the video quality to adjust for appropriate network bandwidth
  - CLI – administrators can control all KE devices via RS-232 or Telnet by issuing commands
  - RS-232 serial ports – allow you to connect to a serial terminal for TextMenu, CLI, or serial devices such as touch screens and barcode scanners

- Security
  - Dedicated LAN port for KE direct connections – can be isolated from the corporate network
  - Secure data transmission – AES 128-bit encryption to secure all data before transmitted over a network and decrypts the data on the receiver
  - Supports industry standard Transport Layer Security (TLS) protocol

- Virtual Media
  - Virtual Media mode enhances data transmission performance, ideally for file transfers, OS patching, software installations and diagnostic testing
  - Supports USB 2.0 DVD / CD drives, USB mass storage devices, PC hard drives and ISO images
  - Supports Smart Card / CAC Reader

Specification

Function	KE6920R	KE6920T
Connectors		
USB Port	2 x USB Type A Female (White)	N/A
Console Ports	2 x USB Type A Female (White) 1 x DVI-D Female (White) 1 x Mini Stereo Jack (Green) 1 x Mini Stereo Jack (Pink) 1 x DB-9 Male (Black)	2 x USB Type A Female (White) 1 x DVI-D Female (White) 1 x Mini Stereo Jack (Green) 1 x Mini Stereo Jack (Pink) 1 x DB-9 Male (Black)
KVM Ports	N/A	1 x USB Type B Female (White) 1 x DVI-D Female (White) 1 x Mini Stereo Jack (Green) 1 x Mini Stereo Jack (Pink) 1 x DB-9 Female (Black)

Power	2 x DC Jack (Black)	2 x DC Jack (Black)
LAN Ports	1 x RJ-45 (Black) 2 x SFP Slot	1 x RJ-45 (Black) 2 x SFP Slot
Switches		
OSD	1 x Pushbutton	N/A
Video	1 x Pushbutton	N/A
Graphics	1 x Pushbutton	N/A
Reset	1 x Semi-recessed Pushbutton	1 x Semi-recessed Pushbutton
Mode Selection	1 x Slide Switch (Extension, RS-232 Config)	1 x Slide Switch (Auto, RS-232 Config/Access Control, Local)
LEDs		
10/100/1000 Mbps	1 (10: Orange / 100: Orange & Green / 1000: Green)	1 (10: Orange / 100: Orange & Green / 1000: Green)
Power	1 (Blue)	1 (Blue)
Local	1 (Green)	1 (Green)
Remote	1 (Green)	1 (Green)
Emulation		
Keyboard / Mouse	USB	USB
Power Consumption	DC5V:8.86W:67BTU/h Note: ● The measurement in Watts indicates the typical power consumption of the device with no external loading. ● The measurement in BTU/h indicates the power consumption of the device when it is fully loaded.	DC5V:10.87W:55BTU/h Note: ● The measurement in Watts indicates the typical power consumption of the device with no external loading. ● The measurement in BTU/h indicates the power consumption of the device when it is fully loaded.
Video Resolution	Up to 2560 x 2048 @ 50 Hz/2048 x 2048 @60Hz/2560 x 1600 @ 60 Hz	Up to 2560 x 2048 @ 50 Hz/2048 x 2048 @60Hz/2560 x 1600 @ 60 Hz
Latency	< 5ms	< 5ms
Environmental		
Operating Temperature	0–50°C	0–50°C
Storage Temperature	-20–60°C	-20–60°C
Humidity	0–95% RH, Non-condensing	0–95% RH, Non-condensing
Physical Properties		
Housing	Metal	Metal
Weight	1.27 kg (2.8 lb)	1.15 kg (2.53 lb)
Dimensions (L x W x H)	22.75 x 17.16 x 5.48 cm (8.96 x 6.76 x 2.16 in.)	21.50 x 16.33 x 4.18 cm (8.46 x 6.43 x 1.65 in.)
Note	For some of rack mount products, please note that the standard physical dimensions of WxDxH are expressed using a LxWxH format.	

Diagram

Diagram

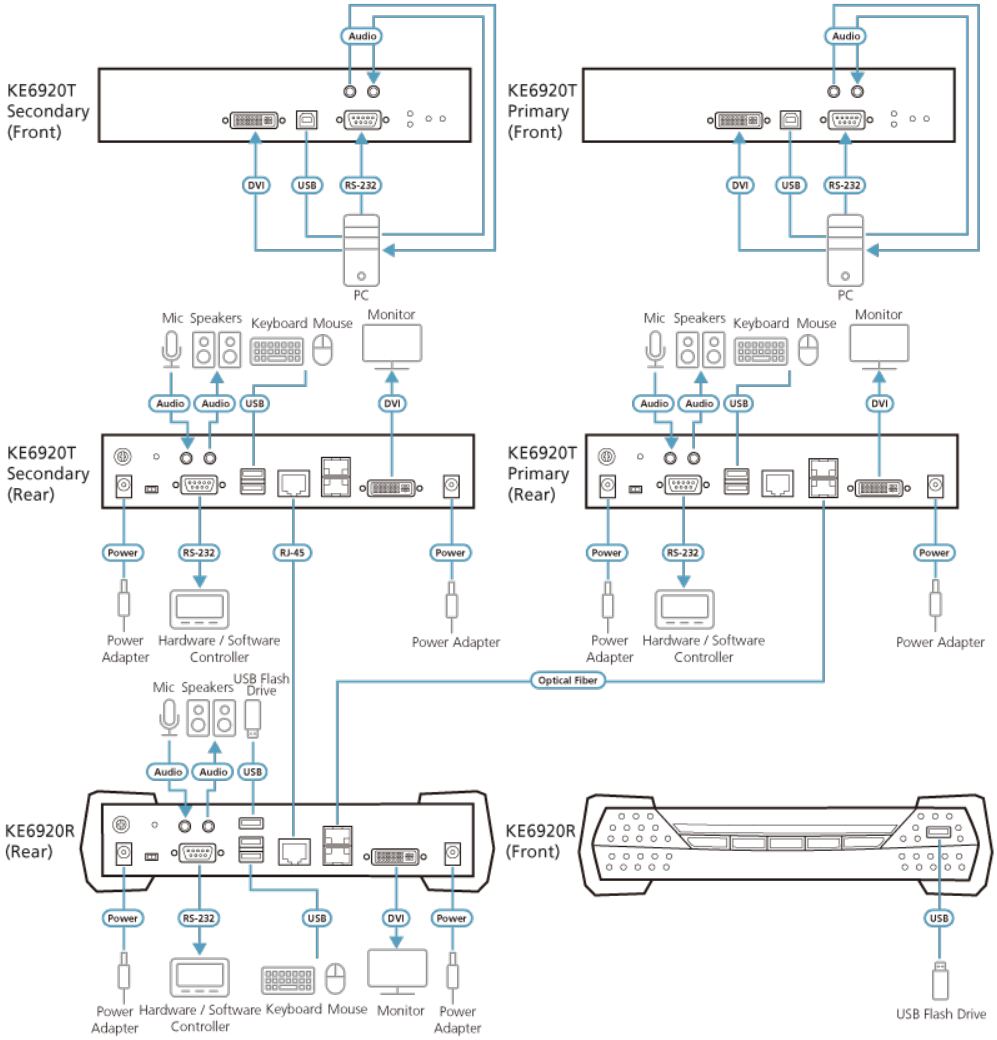

ATEN International Co., Ltd.
3F., No.125, Sec. 2, Datong Rd., Sijhih District., New Taipei City 221, Taiwan
Phone: 886-2-8692-6789 Fax: 886-2-8692-6767
www.aten.com E-mail: marketing@aten.com

© Copyright 2015 ATEN® International Co., Ltd.
ATEN and the ATEN logo are trademarks of ATEN International Co., Ltd.
All rights reserved. All other trademarks are the property of their respective owners.